Research Article

Received: 15 November 2014 Revised: 22 December 2014 Accepted article published: 13 January 2015 Published online in Wiley Online Library: 17 February 2015

(wileyonlinelibrary.com) DOI 10.1002/jsfa.7082

Fast pyrolysis biochar from sawdust improves the quality of desert soils and enhances plant growth

Mahmood Laghari,[a,b] Zhiquan Hu,[a*] Muhammad Saffar Mirjat,[b] Bo Xiao,[a] Ahmed Ali Tagar[b] and Mian Hu[a]

Abstract

BACKGROUND: Biochar has been mostly used in conventional arable soils for improving soil fertility. This study investigated the effect of biochars of different temperatures on plant growth and desert soil properties. Biochars of different temperatures (i.e. 400, 500, 600, 700, and 800 °C) were mixed in the soil with 5% by mass, and the treatments were designated as T-400, T-500, T-600, T-700 and T-800, respectively. Sorghum was used as a test crop, and the effect of biochar on plant height, yield and soil properties was evaluated.

RESULTS: Sorghum yield increased by 19% and 32% under T-400 and T-700, respectively, above the control. Biochar reduced depth-wise moisture depletion in soil columns and hence improved soil water-holding capacity by 14% and 57% under T-400 and T-700, respectively. Soil hydraulic conductivity was reduced by 15% and 42%, and moisture-retention capacity was improved by 16% and 59%. Hence, sorghum net water-use efficiency increased by 52% and 74% in T-400 and T-700, respectively. Biochar also improved soil total carbon, cation exchange capacity and plant nutrient content.

CONCLUSION: The addition of fast pyrolysis biochar made from pine sawdust improved the quality of Kubuqi Desert soil and enhanced plant growth. Hence, it can be used for desert modification.

Supporting information may be found in the online version of this article.

Keywords: drought; moisture retention; plant nutrients; sorghum yield; water-holding capacity

INTRODUCTION

Of the land masses on Earth's surface, approximately 33% are covered by deserts. Deserts are arid areas where rainfall is less than 250 mm per year. Deserts are host to those plants and animals that have adapted to this dry environment, but they are unlivable for humans. However, some deserts may be converted to farming land, as they are extremely rich in basic necessities such as sunlight and warmth. Thus, deserts can be reclaimed with the provision of water,[1] which must be added to the soils to grow plants.[2] Recently, biochar has been added to soils to retain sufficient amounts of moisture for longer periods in order to enhance plant growth.[3] Biochar is a carbon-rich organic material that increases soil carbon, plant nutrient retention, and carbon sequestration.[4,5] Biochar quality and characteristics vary with production conditions and feedstock used.[6] Manure-derived biochar often has a higher ash content, while wood-derived biochar is rich in carbon.[7,8] Higher temperature biochar has a higher carbon and plant nutrient content than lower temperature biochar.[9]

Many studies have been conducted to examine the role of biochar amendment in conventional arable soils.[10,11] Some studies have focused on the ability of biochar to improve the poor characteristics and water-retention capacity of expensive red clay soils in China,[10] its ability to improve rapeseed and sweet potato yield and soil organic carbon in clay soils,[11] and its effect on the soil properties of a ultisol in southern China.[12,13] Current understanding of the agronomic use of biochar in dry lands, particularly in desert soils, is limited. Uzoma *et al.*[14] used cow-manure biochar on dry, sandy soil in Japan and found a 150% improvement in maize grain yield. Hossain *et al.*[15] observed a 64% increase in the yield of cherry tomatoes after applying biochar to a chromosol in Australia.

Considering the previous research done on biochar as a soil amendment, we hypothesise that (1) the addition of fast pyrolysis biochar to the soil of the Kubuqi Desert, Inner Mongolia, will improve the fertility status and increase water holding capacity of soil, and (2) a higher temperature biochar will be

* *Correspondence to: Zhiquan Hu, School of Environmental Science and Engineering, Huazhong University of Science and Technology, Wuhan 430073, P.R. China. E-mail: huzq@hust.edu.cn*

a *School of Environmental Science and Engineering, Huazhong University of Science and Technology, Wuhan 430073, P.R. China*

b *Faculty of Agricultural Engineering, Sindh Agriculture University, Tandojam 70060, Sindh, Pakistan*

Table 1. Physico-chemical properties of feedstock and biochars of different temperatures used in plant growth experiment

Property	Sawdust	BC-400	BC-500	BC-600	BC-700	BC-800
Yield (%)	–	55.00	39.00	26.30	16.70	15.70
pH	–	6.35	6.42	7.00	9.08	9.31
EC (dS m^{-1})	–	2.44	1.96	1.96	0.68	0.57
CEC (cmol kg^{-1})	–	27.50	25.80	25.00	24.90	23.60
Proximate analysis (g kg^{-1})						
MC	30.00	12.00	11.20	6.50	3.40	1.60
VM	801.00	720.00	417.90	241.20	249.60	201.90
Fixed carbon	248.40	314.00	645.30	777.50	821.80	877.70
Ash	19.40	22.00	52.00	66.00	68.00	78.00
Ultimate analysis (g kg^{-1})						
C	392.80	517.10	546.90	650.50	736.10	774.60
H	57.70	49.70	38.50	36.80	29.60	24.60
O	411.10	338.30	213.30	193.00	128.90	108.00
N	2.20	9.30	8.60	6.40	6.00	5.60
S	5.60	7.60	6.40	6.10	5.30	4.90
C/N ratio	208.30	64.86	74.19	118.58	141.94	161.37
Plant nutrients (g kg^{-1})						
Ca	608.70	230.40	376.40	377.50	467.70	459.90
P	ND	12.40	14.20	18.00	21.00	12.00
Mg	ND	ND	ND	ND	ND	54.60
K	95.00	69.10	82.70	107.10	118.50	60.70
Al	ND	ND	ND	ND	19.60	14.00
BET (m^2 g^{-1})	–	83.90	36.60	30.20	65.20	330.00
Total pore volume (m^3 g^{-1})	–	0.012	0.015	0.010	0.016	0.048
Average pore size (nm)	–	5.69	16.26	12.81	29.12	19.61
WHC (g g^{-1})	–	3.95	4.07	4.14	6.86	5.77

EC, Electrical conductivity; CEC, cation exchange capacity; MC, moisture content; VM, volatile matter, BET, Brunauer–Emmett–Teller surface area; WHC, water-holding capacity; ND, not detected.

more effective than lower temperature biochar. Thus, the study was designed to investigate the effect of different fast pyrolysis temperatures on (1) the characteristics of biochar derived from fast pyrolysis of pine sawdust, (2) the growth and dry matter yield (DMY) of sorghum in Kubuqi Desert soil under a controlled environment, and (3) the hydraulic and chemical properties of Kubuqi Desert soil.

EXPERIMENTAL

Soil sampling

Soil samples were collected from the Kubuqi Desert of Inner Mongolia, China, (39.588°N, 109.588°E). The region has an extremely dry climate, with the land receiving less than 250 mm rainfall annually. The mean annual temperature varies between −10 °C in January and 21 °C in July. Twenty soil samples (1 kg each) were randomly collected, down to 300 mm, mixed well, and sieved through a 2 mm sieve. The physico-chemical properties of the soil are given in Table 3.

Feedstock for biochar production

Pine sawdust was collected from a furniture factory of Huazhong University of Science and Technology (HUST), Wuhan, China. The particle size distribution by mass of the pine sawdust was as follows: 55% below 1.50 mm, 36% from 1.50 to 1.80 mm, 7% from 1.80 to 2.50 mm, and 2% from 2.50 to 3.00 mm. The proximate and ultimate analysis of the feedstock is shown in Table 1.

Pyrolysis facility

The biochar was produced using a lab-scale screw-type continuous-feed fast pyrolysis reactor (Fig. 1) at the Bioenergy Laboratory, School of Environmental Science and Engineering, HUST, China. The setup comprised a stainless steel tube reactor (ID 81 mm, OD 89 mm, and height 114 mm) externally heated with an electric furnace. The temperature of the reactor was controlled homogeneously by a thermocouple with an accuracy of ±5 °C. Triplicate pyrolytic runs were performed to produce biochar at five different temperatures (i.e. 400, 500, 600, 700 and 800 °C) under limited O_2 conditions, which were abbreviated as BC-400, BC-500, BC-600, BC-700 and BC-800, respectively. For the production of the biochar, the reactor was first allowed to heat up to the desired pyrolysis temperature, the feedstock was loaded into the hopper, and the feed screw motors were switched on at $0.015 \times g$ at the feed rate of 0.18 kg h^{-1}, while the biomass particle pyrolysis time was kept constant at 3 s. After pyrolysis, the reactor was switched off and allowed to cool to ambient temperature. The biochar was then collected from the ash bucket, weighed, and stored in airtight containers for characterisation and further experimentation.

Yield and characterisation of biochar

Yield of the biochar at different temperatures was calculated on a wet basis, while the proximate analysis was conducted following ASTM D 3176.[16] The elemental compositions of biochar such as C, H, N, S and O were determined by the dry combustion

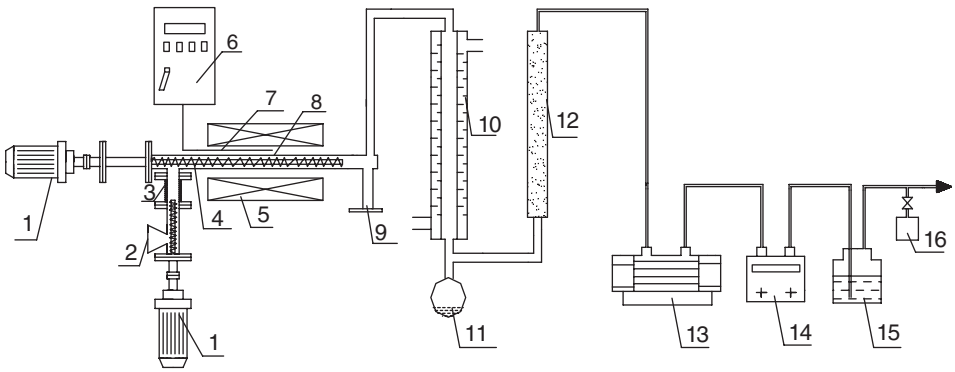

Figure 1. Schematic of fast pyrolysis reactor: 1. motor, 2. feed hopper, 3. steel–fluoride plastic, 4. screw feeder, 5. electric furnace, 6. temperature controller, 7. thermocouple, 8. pyrolysis reactor, 9. ash bucket, 10. condenser, 11. flask, 12. gas wool filter, 13. vacuum pump, 14. gas flow meter, 15. water-sealed bottle, 16. gas sampling point.

method using a CHNS/O analyser (Vario Micro Cube; Elementar, Germany). Total oxides of Mg, Al, P, K, and Ca in the biochar were determined by X-ray fluorescence (EDAX, Mahwah, NJ, USA). The pH and electrical conductivity were measured in triplicate in 1:10 (w/v) biochar to deionised water after shaking the samples on a mechanical shaker for 1 h. We used a PHS-3C digital glass electrode precision pH meter and a DDS-307 digital glass electrode conductivity meter (Analytical Instruments Co., Ltd., Shanghai, China) for testing the pH and electrical conductivity, respectively. The cation exchange capacity (CEC) of the biochar was measured using the 1 mol L^{-1} ammonium acetate (pH 7) method described by Wu *et al.*[17] (Details are provided in the supporting information). The Brunauer–Emmett–Teller surface area of the biochar was determined using an accelerated surface area porosimetry system (ASAP2010; Micrometrics, Norcross, GA, USA). The X-ray diffraction analysis (X'Pert PRO; PANalytical B.V., Almelo, Netherlands) was carried out to identify the crystallographic structure of the biochar. Fourier transformation infrared (FTIR) analyses of the biochar were achieved using a VERTEX 70 FTIR Spectrometer (Bruker, Ettlingen, Germany). The biochar samples were scanned at the mid-infrared electromagnetic spectrum range of 4000 to 400 cm^{-1} wavenumbers. To analyse the surface morphology of the biochar, scanning electron microscopy (GEMINI 1530; Oberkochen, Germany) imaging analyses of the biochar samples were conducted. The particle size distribution of the biochar was checked with sieve analysis. The water-holding capacity (WHC) of the biochar was measured gravimetrically according to the procedures described by Kinney *et al.*[18] with slight modification. Simply, we soaked a 10 g oven-dried biochar sample without further size reduction in distilled water in a glass beaker at 40 °C. After 1 h, we transferred the suspension in a clamped ceramic Buchner funnel wrinkled with cellulose filter paper (Whatman No. 1). The sample was allowed to drain freely for 1 h, and WHC was then calculated as mass of water retained by the mass of dry biochar while water absorbed by the filter paper was adjusted.

Plant growth experiment

The biochar was crushed manually in a ceramic pot and passed through a 0.125 mm sieve until it had the same particle size as that of the sandy soil used in the experiment. The biochar was thoroughly mixed in the soil with 5% by mass equivalent to a field application rate of 105 Mg ha^{-1}. The biochar mixing rate was calculated considering the soil depth and bulk density values to be 150 mm and 1.5 g cm^{-3}, respectively. We used specially designed open-top glass containers (supplementary Fig. 1) having 200 mm height and 60 mm diameter with 0.50-mm holes at the bottom for plant growth. A 15 mm layer of quartz sand (particle size 1.0–2.0 mm) was placed in the bottom of each container to facilitate the drainage of excess irrigation water. We compacted the soil in containers up to a density of 1.5 g cm^{-3} while providing a freeboard of 40 mm for irrigation. The following six treatments were replicated three times: (1) control soil (Co), (2) soil with BC-400 (T-400), (3) soil with BC-500 (T-500), (4) soil with BC-600 (T-600), (5) soil with BC-700 (T-700), and (6) soil with BC-800 (T-800). The containers were irrigated with distilled water up to the field capacity and then kept in a light- and temperature-controlled incubator (Model, BSG-250/300/400/800; Boxun, Ltd., Shanghai, China) at 21 °C day/night (similar to the average monthly temperature of Inner Mongolia, China, during the summer). Five seeds of sorghum were sown in each container on 2 August 2013. After 1 week of emergence, weak plants were thinned, and only one healthy plant in each container was grown for 8 weeks. Plants were grown at field capacity, moisture loss was measured by weighing the containers, and the weight of the containers was adjusted by adding water on a daily basis. During weeks 7 and 8, drought conditions were imposed by keeping the moisture content (MC) at less than 50% of field capacity in order to assess the plant's tolerance level in the biochar-amended soil to drought. After 8 weeks of emergence, the plants were harvested, washed with distilled water, and oven-dried in paper envelopes at 65 °C for 72 h. The DMY was computed and divided by the quantity of total irrigation water consumed during the plant growth to determine the water-use efficiency (WUE) (DMY L^{-1} of irrigation water) of sorghum.

Analyses of post-harvested soil

After the plant growth experiment, the soil was removed from the containers, air-dried, mixed thoroughly, and sieved in a 2 mm sieve. The samples were analysed to assess the effect of biochar amendment on the hydraulic and chemical properties of the soil.

Soil hydraulic properties

The influence of biochars of different temperatures on the WHC of desert soil at field capacity was tested gravimetrically as follows. A known amount of soil was filled in specially designed equipment (supplementary Fig. 2) to a certain density. The soil was then thoroughly saturated with a known amount of water. The soil was left to drain freely in a graduated cylinder until the last drop of

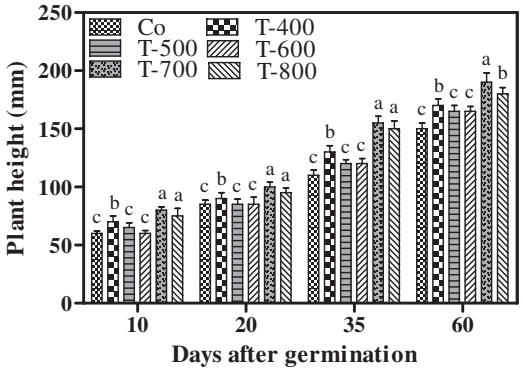

Figure 2. Effect of pyrolysis temperature of biochar on plant height at different growth stages of sorghum. Error bars show standard deviations, and treatment means with different letters are significantly different ($P < 0.05$).

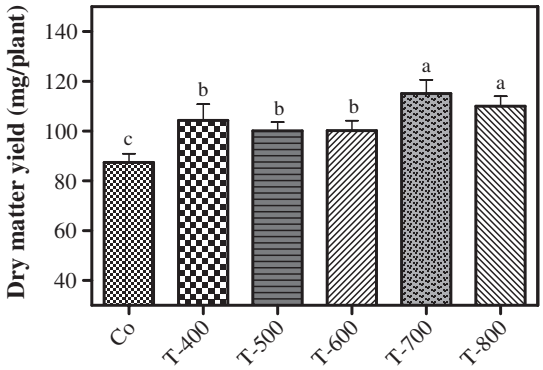

Figure 3. Effect of pyrolysis temperature of biochar on dry matter yield of sorghum. Error bars show standard deviations, and treatment means with different letters are significantly different ($P < 0.05$).

water had drained. The WHC was calculated by comparing the amount of water absorbed per unit volume of soil.

The moisture-retention capacity (MRC) of the soil was determined gravimetrically. Simply, 100-g soil samples, pre-saturated at field capacity, were placed in open-top plastic containers (height, 65 mm; width, 45 mm; length, 95 mm) and then oven-dried at different temperatures (i.e. 20, 25, 30, 35, 40, 45 and 50 °C) for different time periods, and the average moisture loss percentage was calculated by weighing the containers.

The effect of biochar on the depth-wise depletion of MC in the soil columns was determined as follows. The soil samples were re-packed in the containers in which they had been packed for plant growth. The soil containers were saturated at field capacity and then oven-dried at 105 °C for 1, 2, and 3 h. The soil samples from each container were carefully taken from the top 0–20 mm, middle 65–85 mm, and bottom 140–160 mm depths. The MC of the samples was determined gravimetrically.

Soil hydraulic conductivity (K) was measured by the constant-head method. We used a soil permeability tester (Model-TST-55; Nanjing T-Bota, Ltd., Jiangsu, China) having a 61.80 mm diameter and 40.00 mm height.

Soil chemical properties

Soil pH was determined using 1:2.5 (w/v) soil:deionised water. The soil total carbon and N, plant nutrients, and CEC were determined using the procedures described above for the biochar analyses.

Statistical analysis

Statistical analysis was performed with Origin Pro., version 8.6 (Origin Lab., Northampton, MA, USA). Significance for differences between the treatment means was examined by a one-way analysis of variance (ANOVA), with a probability of 5%.

RESULTS

Biochar yield and characterisation

The results for biochar yield, proximate and ultimate analysis, and plant nutrients are shown in Table 1. Biochar yield substantially decreased from 55% to 15.7% when the temperature was increased from 400 to 800 °C. Specifically, biochar yield decreased from 55% at 400 °C to 39%, 26.3%, 16.7%, and 15.7% at 500, 600, 700 and 800 °C, respectively. The pH of the biochar ranged between 6.35 and 9.31, and electrical conductivity increased from 0.57 to 2.44 dS m^{-1}. The carbon content increased from 517.10 to 774.70 g kg^{-1}, while the N content decreased from 9.30 to 5.60 g kg^{-1}. The C/N ratio of the five different biochars ranged between 64.86 and 161.37. The fixed C increased from 31.40 to 877.70 g kg^{-1}, whereas the volatiles decreased from 720 to 201.90 g kg^{-1}. Ash increased from 22 % to 78 g kg^{-1}, and the biochar had less than 2% MC. Scanning electron microscopy images (supplementary Fig. 2) of the biochar revealed changes in the shape of the surface structure due to increasing temperature. The Brunauer–Emmett–Teller surface area of the biochar increased from 3.02 to 8.39 m^2 g^{-1}, total pore volume remained between 0.012 and 0.048 m^3 g^{-1}, and the average pore size was 5.69–29.12 nm (Table 1).

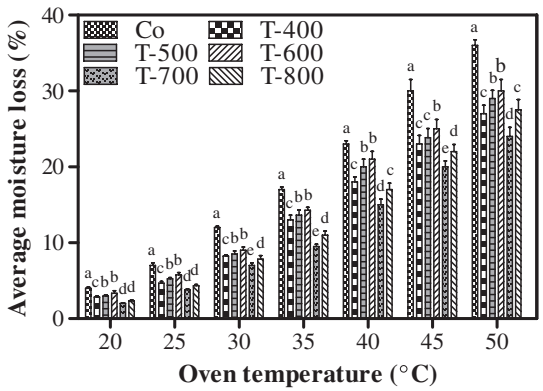

Figure 4. Moisture loss from soil columns after oven drying at different temperatures. Error bars show standard deviations, and treatment means with different letters are significantly different ($P < 0.05$).

The WHC of the biochar was between 3.95 and 6.68 g g^{-1}. The weight fractions of the different sized particles in the biochar varied with pyrolysis temperatures (supplementary Fig. 3). The BC-400 sample had a 15.74% weight fraction, while the BC-800 sample had a 38.16% weight fraction of the finest particles (<0.2 mm). The O—H hydroxyl and —C═O carbonyl functional groups were found in all five biochar samples as revealed by FTIR spectra (supplementary Fig. 4). An aromatic C—H stretching vibration was observed in the BC-400, BC-500, and BC-600 biochar samples, which decreased in higher temperature biochar (BC-700 and BC-800). The —C—O— carbon–oxygen single bond was present in BC-700 and BC-800 but not observed in the lower temperature biochar. The phenolic O—H functional groups were observed in BC-400, BC-500 and BC-600. X-ray diffraction spectra showed

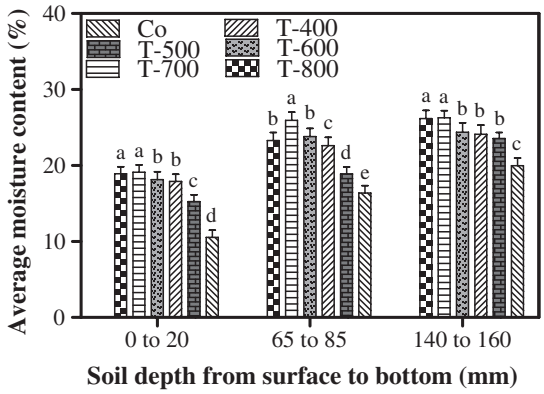

Figure 5. Average water content in soil columns at different depths after oven drying soil columns at 105 °C for different time periods (i.e. 1, 2 and 3 h). Error bars show standard deviations, and treatment means with different letters are significantly different ($P < 0.05$).

similar patterns in all biochar samples (supplementary Fig. 5). A broad peak at 2θ 22.5 ($d = 3.95$ Å) in the feedstock and BC-400 sample was probably due to the presence of the crystalline cellulosic structure, while a small peak at 2θ 35.2 ($d = 1.33$ Å) in BC-400 indicated the quartz (SiO_2), which vanished at higher temperatures. Shorter peaks in BC-700 and BC-800 at 2θ 30 ($d = 1.54$ Å) showed some mineral crystals, such as sylvite.

Effect of biochar on plant growth and sorghum dry matter yield

The influence of biochars of different temperatures on plant growth and DMY is demonstrated in Fig. 2 and Fig. 3, respectively. Under different treatments, the plant heights were in the order of T-700 > T-800 > T-400 > T-600 > T-500 > Co. At 35 and 60 days after germination, the heights of the plants in T-400, T-700, and T-800 were significantly greater than that of the control. Meanwhile, the plant heights in the T-500 and T-600 treatments were not significantly different from the control. At 60 days after germination, the height of the plants in T-700 increased by 26% compared to that of the control.

The DMY in biochar-amended soil was significantly higher than that of the control. On average, 104, 100, 100.2, 115 and 110 mg plant^{-1} DMY of grass was recorded in T-400, T-500, T-600, T-700, and T-800, respectively against 87 mg plant^{-1} in Co. A maximum increase of 23% in DMY was observed under T-700, while a minimum increase of 14% was recorded under T-400 as compared to the control.

Effect of biochar on hydraulic properties of soil

The biochar amendment significantly increased the WHC of the soil by 14%, 23%, 33%, 57% and 38% under the T-400, T-500, T-600, T-700 and T-800 treatments, respectively, as shown in Table 2. The amount of irrigation water consumed for plant growth in the different treatments was reduced by 21%, 18%, 13%, 24% and 16% under the T-400, T-500, T-600, T-700 and T-800 treatments, respectively (Table 2). However, the effect of pyrolysis temperature on irrigation water savings was not statistically significant ($P = 0.54$). The WUE (DMY L^{-1} of irrigation water) was increased significantly by 52%, 41%, 32%, 74% and 50% under the T-400, T-500, T-600, T-700 and T-800 treatments, respectively (Table 2).

The average moisture loss from wet soil containers after oven drying at different temperatures is presented in Fig. 4. A minimum moisture loss was recorded in T-700 followed by T-800. The MRC of desert soil increased by 16% and 59% in the T-400 and T-700 treatments, respectively, relative to the control.

Table 2. Effect of biochar addition on water-holding capacity of soil and sorghum net water-use efficiency

Treatment	Irrigation water used (L)	DMY (mg plant^{-1})	WUE (mg L^{-1})	WHC (g g^{-1})
Co	2.22^a	87.00^c	39.38^c	0.21^d
T-400	1.74^b	104.00^b	59.97^b	0.24^c
T-500	1.80^b	100.00^b	55.60^b	0.26^c
T-600	1.92^b	100.20^b	52.19^b	0.28^b
T-700	1.68^b	115.00^a	68.57^a	0.33^a
T-800	1.86^b	110.00^a	59.13^b	0.29^b

Different letters in the same column indicate significant differences ($P < 0.05$) between the treatments.
WHC, Water-holding capacity; WUE, water-use efficiency; DMY, dry matter yield.

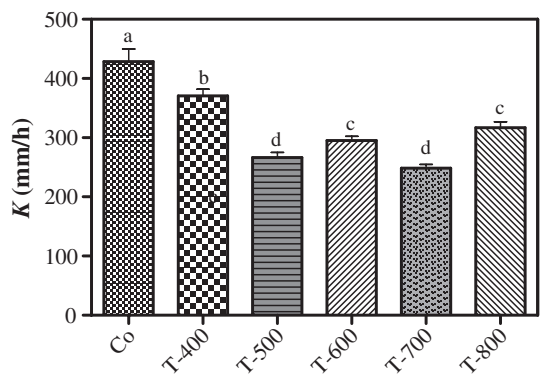

Figure 6. Effect of pyrolysis temperature of biochar on soil hydraulic conductivity. Error bars show standard deviations, and treatment means with different letters are significantly different ($P < 0.05$).

The effect of biochar amendment on the depth-wise moisture distribution in the soil columns after oven drying at 105 °C for different time periods is shown in Fig. 5. Biochar amendment increased MC at different depths in all treatments. At the top 0–20 mm, the existing MC under T-700 was 19.12%, which was significantly higher (by 81%) than the control treatment (10.55%). At 60–80 mm depth, the MC under T-700 was 25.94%, which was significantly higher (by 82%) than the control (16.4%). At the bottom, the MC was 26.27% under T-700, which was significantly higher (by 60%) than the control (19.97%).

The results on hydraulic conductivity (K) under the control and different treatments are demonstrated in Fig. 6. The K decreased under all treatments, but the maximum decrease was recorded under T-500 (37%) and T-700 (42%) as compared to the control. However, the differences were not statistically significant ($P = 0.11$, $P = 0.092$).

Effect of biochar on chemical properties of soil

The results of the chemical properties of the post-harvested soil are summarised in Table 3. Soil organic matter substantially increased by 72%, 66%, 76%, 62% and 70% under the T-400, T-500, T-600, T-700 and T-800 treatments, respectively. The total C content of the soil significantly increased by 6%, 14%, 19%, 34% and 42% under

Table 3. Chemical properties of soil after the plant growth experiments

Parameter	Co	T-400	T-500	T-600	T-700	T-800
Soil pH	8.47[c]	8.12[e]	8.14[e]	8.22[d]	8.67[b]	8.71[a]
CEC (cmol kg^{-1})	2.20[b]	2.47[a]	2.44[a]	2.45[a]	2.40[a]	2.39[a]
SOM (g kg^{-1})	25.70[b]	44.40[a]	43.90[a]	45.30[a]	41.70[a]	43.90[a]
C (g kg^{-1})	6.30[c]	6.70[c]	7.20[b]	7.50[b]	8.50 [a]	9.00[a]
N (g kg^{-1})	0.50[a]	0.60[a]	0.50[a]	0.50[a]	0.40[a]	0.50[a]
S (g kg^{-1})	5.60[a]	2.50[c]	2.70[bc]	2.80[bc]	2.80[bc]	3.30[b]
C/N ratio	18.37[b]	11.95[c]	14.71[c]	17.50[b]	24.79[a]	21.00[a]
K (g kg^{-1})	5.00[d]	5.57[d]	7.54[c]	8.68[c]	10.24[b]	15.00[a]
Ca (g kg^{-1})	2.30[c]	5.38[b]	7.27[a]	7.41[a]	9.58[a]	7.90[a]
Fe (g kg^{-1})	6.60[c]	13.43[a]	9.92[b]	6.64[c]	8.59[b]	5.00[c]

Different letters in the same row indicate significant differences ($P < 0.05$) between the treatments.
CEC, cation exchange capacity; SOM, soil organic matter; *K*, hydraulic conductivity.

the T-400, T-500, T-600, T-700 and T-800 treatments, respectively, relative to the control. The total N content increased by 20% under T-400, but it decreased by 20% under T-700. Meanwhile, total N content under the T-500, T-600 and T-800 treatments was identical to that of the control. The soil C/N ratio significantly decreased by 34%, 19% and 4% in T-400, T-500 and T-600, respectively, while it significantly increased by 34% and 14% under the T-700 and T-800 treatments, respectively, compared to the control. The sulfur (S) content of the soil significantly decreased in all treatments; however, the maximum decrease relative to the control was 55% in T-400.

The potassium (K) content significantly increased by 11% and 104% under the T-400 and T-700 treatments, respectively, compared to the control. The calcium (Ca) content also significantly increased by 133% and 315% under the T-400 and T-700 treatments, respectively, relative to the control. Biochar amendment significantly decreased soil pH under T-400, T-500, and T-600 by 0.35, 0.33, and 0.25 units, respectively, compared to the control soil. The soil pH significantly increased by 0.20 and 0.24 units under the T-700 and T-800 treatments, respectively, compared with the control soil pH.

Biochar amendment slightly increased the CEC of the soil in all treatments as compared to the control, and the effect was statistically significant. The maximum (12%) increase in CEC compared to the control was observed under the T-400 treatment.

DISCUSSION

Influence of temperature on biochar yield and characteristics

The yield of the biochar was considerably affected by pyrolysis temperature as expected. A decreasing trend of biochar yield with increasing reactor temperature has been reported previously.[19] The decrease in biochar yield at over 500 °C was less, because the decomposition of cellulose and hemi-cellulose was already complete.[20] The volatile matter of biochar is mainly dependent on pyrolysis temperature rather than feedstock.[7] The biochar had a low ash content possibly due to the low mineral content of the woody feedstock.[7] In a past study, woody feedstock biochar had a lower ash content than manure-derived biochar.[21] In another study, lower temperature biochar had a higher organic concentration than higher temperature biochar; therefore, it had higher volatile matter content.[22] The current study showed that biochar produced at higher temperatures had a higher C content. Hence, biochar produced at 400–500 °C may have greater potential to sequester C when used in soil.[20] The biochar produced at 400, 500 and 600 °C had acidic to neutral pH, and this was attributed to the presence of acidic functional groups, such as phenolic O—H (supplementary Fig. 4). The acidic behaviour of biochar has already been reported previously.[23] In one study, biochar produced through flash pyrolysis of softwood demonstrated an acidic pH of 4.2,[24] much lower than in our findings. In this study, the alkaline pH of biochar at 700 and 800 °C was due to the release of acidic functional groups at higher temperatures and the non-pyrolysed inorganic element concentration in the feedstock.[25] The biochar produced for this study had a low surface area, which is typical of wood-derived biochar.[26,27] In contrast, some hardwood biochar has been shown to have a very high surface area (300.60 m^2 g^{-1}).[28] Higher temperatures tend to lead to the formation of smaller particle biochar with high porosity.[26] The crystalline mineral structure of the cellulose feedstock became less distinct in the biochar sample due to the loss of cellulose.[9,21] The formation of sylvite in the biochar is in accordance with the literature.[21]

Effect of biochar on plant growth and yield

Biochar remediation of soil has been employed to increase soil fertility and WHC, which enhances plant growth.[14,29] Improved plant height and DMY under biochar-amended soil (Fig. 2 and Fig. 3, respectively) confirmed our first hypothesis that biochar would enhance crop growth in the soil of the Kubuqi Desert. The improvement in plant growth was attributed mainly to the increase in soil hydraulic properties, such as WHC and MRC, and the decrease in soil hydraulic conductivity, suggesting more water available for plants.[30,31] Another possible reason for higher plant growth and yield is the increase in soil nutrient content (Table 3).[14,15,29] Uzoma *et al.*[14] used cow manure biochar derived at 500 °C under sandy soil and reported a 300% higher yield than our findings, and it was attributed to the increase in soil P and N availability. In contrast, the fast-pyrolysis biochar obtained from pinewood at 400 to 500 °C suppressed the germination and yield of maize kernels due to easily degradable or soluble organic phytotoxic compounds present in the biochar.[24] Plant growth and yield were highest in the T-700 treatment, as the biochar that was used in T-700 was made at a higher temperature (700 °C); hence, it had a higher WHC and more plant nutrients (Table 2 and Table 3). Previous studies have reported that the biochars made at higher pyrolysis temperatures have higher WHCs and plant nutrients.[9,18] The maximum plant height as well as the DMY in the higher temperature biochar proved the second hypothesis: that higher temperature biochar would be more effective at improving desert soil quality than lower temperature biochar.

Effect of biochar on hydraulic properties of soil

Generally, the addition of biochar improved the hydraulic properties of the sandy soil, which is in agreement with previous reports.[18,32] The soil of the Kubuqi Desert had a low WHC owing to its lower organic matter content and coarse texture. The addition of biochar increased the WHC of the soil owing to its higher surface area and porosity.[18,25] A study by Busscher *et al.*[31] suggested that soils having more soil organic matter can hold more water. Comparable results on the effect of biochar on soil WHC have been reported previously.[29,32,33] In contrast, the biochar obtained from flash pyrolysis of softwood did not increase

the WHC of the sandy soil.[24] The biochar addition reduced the hydraulic conductivity of the soil and hence increased the MRC against evaporation and gravity. As the fine biochar particles filled in the pore spaces, the permeability was reduced and the moisture retention was increased in the biochar-amended soil.[30,34] Results on MRC are consistent with the findings of Singh *et al.*[34] and Shafie *et al.*[35] The authors attributed this to the high porosity of biochar. However, the addition of biochar had no effect on the water-retention ability of a sandy soil in Brewer *et al.*,[36] suggesting that the biochar function in soil varies with biochar properties and soil types. Results demonstrated savings in irrigation water under biochar-amended treatments due to increased MRC and decreased hydraulic conductivity. Because of the savings in irrigation water and improvement of DMY, the sorghum net WUE increased under amended soil. High-temperature biochar had a higher WHC (Table 1); hence, the WUE was higher in the T-700 treatment (Table 2). The above results reflect the effect of pyrolysis temperature on soil hydraulic properties, and it can be concluded that the influence of biochar on soil properties varies with biochar types and soil conditions.

Effect of biochar on chemical properties of soil

Biochar amendment influenced the chemical properties of Kubuqi Desert soil; however, the effect varied depending upon the properties and application rate of the biochar.[37] The biochar amendment decreased soil pH and increased CEC and electrical conductivity, which is consistent with previous studies.[12,14,15] The soil pH decreased or increased in amended soil depending upon the initial pH value of the biochar, soil type, and physical conditions.[38] Xu *et al.*[39] reported that the content of soil organic carbon and CEC are important factors influencing soil pH. Soil pH decreased under T-400, T-500 and T-600, which improved plant nutrient use efficiency and hence enhanced sorghum growth and yield.[38] In contrast, soil pH increased in the T-700 and T-800 treatments and increased plant growth and yield mainly due to the fact that there was more water available to plants and increased nutrients.[14] Biochar amendment improved soil CEC, which is consistent with previous research.[14,40] Conversely, biochar addition had no effect on the CEC of Norfolk soil, and this was attributed to the lower amounts of readily oxidisable structural groups and the high C/N ratio of biochar.[29] Biochar amendment increased the soil total C more than the soil total N, hence the high C/N ratio of the soil.[14,39] Biochar decreased total S content, while it increased K and Ca content of soil, as shown in Table 3. This is in accordance with the results of Novak *et al.*[29] and Uzoma *et al.*[14] Biochars made at higher temperatures had a higher content of essential nutrients (K and Ca) (Table 1) mainly due to concentrated of these elements in biochar samples with temperature. Additionally, these elements might not have been lost by volatilisation.[9] The higher K and Ca content was responsible for the higher plant growth and yield in the T-700 and T-800 treatments.

CONCLUSION

Biochar obtained through fast pyrolysis of pine sawdust improved the quality of Kubuqi Desert soil under laboratory experiments. The biochar improved the soil's hydraulic properties due to its large surface area and porous structure; hence, it enabled the soil to store more water in the root zone for a longer time. It also improved the soil's chemical properties, such as pH, CEC, soil organic matter, and plant nutrients. Due to this improvement in soil properties, the plant growth and yield increased significantly in the biochar-amended soil compared to the control. The biochars made at higher pyrolysis temperatures possessed more plant nutrients and had more porosity to store more water. Hence, plant growth and yield were higher under the treatments in which we used higher temperature biochars. It can be concluded that biochar obtained through fast pyrolysis of plant-derived biomass can be utilised in desert soils for improving soil fertility. The biochars made at higher temperatures are more effective in improving desert soil fertility than those made at lower temperatures. Biochar with 5% by mass equivalent to a field application rate of 105 tons ha^{-1} considering a soil depth of 150 mm can improve the quality of desert soils.

ACKNOWLEDGEMENTS

This study was partially funded by the National High Technology Research and Development Program of China (No. 2012AA101809). The biochar was characterised by the Analytical and Testing Center of Huazhong University of Science and Technology (HUST), Wuhan, P.R. China.

SUPPORTING INFORMATION

Supporting information may be found in the online version of this article.

REFERENCES

1 Zak J and Whitford W, Interactions among soil biota in desert ecosystems. *Agric Ecosyst Environ* **24**:87–100 (1988).
2 Vohland K, A review of in situ rainwater harvesting (RWH) practices modifying landscape functions in African drylands. *Agric Ecosyst Environ* **131**:119–127 (2009).
3 Ouyang L, Wang F, Tang J, Yu L and Zhang R, Effects of biochar amendment on soil aggregates and hydraulic properties. *J Soil Sci Plant Nutr* **13**:991–1002 (2013).
4 Lehmann J, Rillig MC, Thies J, Masiello CA, Hockaday WC and Crowley D, Biochar effects on soil biota – A review. *Soil Biol Biochem* **43**:1812–1836 (2011).
5 Quin PR, Cowie AL, Flavel RJ, Keen BP, Macdonald LM, Morris SG *et al*, Oil mallee biochar improves soil structural properties – A study with x-ray micro-CT. *Agric Ecosyst Environ* **191**:142–149 (2014).
6 Song W and Guo M, Quality variations of poultry litter biochar generated at different pyrolysis temperatures. *J Anal Appl Pyrolysis* **94**:138–145 (2012).
7 Zhao L, Cao X, Masek O and Zimmerman A, Heterogeneity of biochar properties as a function of feedstock sources and production temperatures. *J Hazard Mater* **256–257**:1–9 (2013).
8 Cantrell KB and Martin JH 2nd, Stochastic state–space temperature regulation of biochar production. Part II: Application to manure processing via pyrolysis. *J Sci Food Agric* **92**:481–489 (2011).
9 Al-Wabel MI, Al-Omran A, El-Naggar AH, Nadeem M and Usman AR, Pyrolysis temperature induced changes in characteristics and chemical composition of biochar produced from conocarpus wastes. *Bioresour Technol* **131**:374–379 (2013).
10 Demisie W, Liu Z and Zhang M, Effect of biochar on carbon fractions and enzyme activity of red soil. *Catena* **121**:214–221 (2014).
11 Liu Z, Chen X, Jing Y, Li Q, Zhang J and Huang Q, Effects of biochar amendment on rapeseed and sweet potato yields and water stable aggregate in upland red soil. *Catena* **123**:45–51 (2014).
12 Peng X, Ye LL, Wang CH, Zhou H and Sun B, Temperature- and duration-dependent rice straw-derived biochar: Characteristics and its effects on soil properties of an ultisol in southern China. *Soil Tillage Res* **112**:159–166 (2011).
13 Lashari MS, Ye Y, Ji H, Li L, Kibue GW, Lu H *et al*, Biochar–manure compost in conjunction with pyroligneous solution alleviated salt

stress and improved leaf bioactivity of maize in a saline soil from central China: A 2-year field experiment. *J Sci Food Agric* doi: 10.1002/jsfa.6825 (2014).
14 Uzoma KC, Inoue M, Andry H, Fujimaki H, Zahoor A and Nishihara E, Effect of cow manure biochar on maize productivity under sandy soil condition. *Soil Use Manage* **27**:205–212 (2011).
15 Hossain MK, Strezov V, Chan KY and Nelson PF, Agronomic properties of wastewater sludge biochar and bioavailability of metals in production of cherry tomato (*Lycopersicon esculentum*). *Chemosphere* **78**:1167–1171 (2010).
16 American Association for Testing and Materials (ASTM), *Petroleum Products, Lubricants, and Fossil Fuels: Gaseous Fuels, Coal, and Coke.* ASTM International, West Conshohocken, PA (2006).
17 Wu W, Yang M, Feng Q, McGrouther K, Wang H, Lu H *et al*, Chemical characterization of rice straw-derived biochar for soil amendment. *Biomass Bioenergy* **47**:268–276 (2012).
18 Kinney TJ, Masiello CA, Dugan B, Hockaday WC, Dean MR, Zygourakis K *et al*, Hydrologic properties of biochars produced at different temperatures. *Biomass Bioenergy* **41**:34–43 (2012).
19 DeSisto WJ, Hill N, Beis SH, Mukkamala S, Joseph J, Baker C *et al*, Fast pyrolysis of pine sawdust in a fluidized-bed reactor. *Energy Fuels* **24**:2642–2651 (2010).
20 Lee Y, Eum PR, Ryu C, Park YK, Jung JH and Hyun S, Characteristics of biochar produced from slow pyrolysis of Geodae–Uksae 1. *Bioresour Technol* **130**:345–350 (2013).
21 Kloss S, Zehetner F, Dellantonio A, Hamid R, Ottner F, Liedtke V *et al*, Characterization of slow pyrolysis biochars: Effects of feedstocks and pyrolysis temperature on biochar properties. *J Environ Qual* **41**:990–1000 (2012).
22 Song WP and Guo MX, Quality variations of poultry litter biochar generated at different pyrolysis temperatures. *J Anal Appl Pyrolysis* **94**:138–145 (2012).
23 Carrier M, Hardie AG, Uras U, Gorgens J and Knoetze J, Production of char from vacuum pyrolysis of South-African sugar cane bagasse and its characterization as activated carbon and biochar. *J Anal Appl Pyrolysis* **96**:24–32 (2012).
24 Borchard N, Siemens J, Ladd B, Möller A and Amelung W, Application of biochars to sandy and silty soil failed to increase maize yield under common agricultural practice. *Soil Tillage Res* **144**:184–194 (2014).
25 Novak JM, Lima I, Xing B, Gaskin JW, Steiner C, Das KC *et al*, Characterization of designer biochar produced at different temperatures. *Ann Environ Sci* **3**:195–206 (2009).
26 Kim KH, Kim JY, Cho TS and Choi JW, Influence of pyrolysis temperature on physicochemical properties of biochar obtained from the fast pyrolysis of pitch pine (*Pinus rigida*). *Bioresour Technol* **118**:158–162 (2012).
27 Spokas KA and Reicosky DC, Impacts of sixteen different biochars on soil greenhouse gas production. *Ann Environ Sci* **3**:179–193 (2009).
28 Mukome FND, Zhang XM, Silva LCR, Six J and Parikh SJ, Use of chemical and physical characteristics to investigate trends in biochar feedstocks. *J Agric Food Chem* **61**:2196–2204 (2013).
29 Novak JM, Busscher WJ, Laird DL, Ahmedna M, Watts DW and Niandou MAS, Impact of biochar amendment on fertility of a southeastern coastal plain soil. *Soil Sci* **174**:105–112 (2009).
30 Uzoma KC, Inoue M, Andry H, Zahoor A and Nishihara E, Influence of biochar application on sandy soil hydraulic properties and nutrient retention. *Food Agric Environ* **9**:1137–1143 (2011).
31 Busscher WJ, Novak JM, Evans DE, Watts DW, Niandou MAS and Ahmedna M, Influence of pecan biochar on physical properties of a Norfolk loamy sand. *Soil Sci* **175**:10–14 (2010).
32 Briggs C, Breiner JM and Graham RC, Physical and chemical properties of *Pinus ponderosa* charcoal: Implications for soil modification. *Soil Sci* **177**:263–268 (2012).
33 Abel S, Peters A, Trinks S, Schonsky H, Facklam M and Wessolek G, Impact of biochar and hydrochar addition on water retention and water repellency of sandy soil. *Geoderma* **202–203**:183–191 (2013).
34 Singh B, Singh BP and Cowie AL, Characterisation and evaluation of biochars for their application as a soil amendment. *Aust J Soil Res* **48**:516–525 (2010).
35 Shafie ST, Salleh MAM, Hang LL, Rahman MM and Ghani WAWAK, Effect of pyrolysis temperature on the biochar nutrient and water retention capacity. *J Purity Util React Environ* **1**:323–337 (2012).
36 Brewer CE, Hu YY, Schmidt-Rohr K, Loynachan TE, Laird DA and Brown RC , Extent of pyrolysis impacts on fast pyrolysis biochar properties. *J Environ Qual* **41**:1115–1122 (2012).
37 Alburquerque JA, Calero JM, Barrón V, Torrent J, del Campillo MC, Gallardo A *et al*, Effects of biochars produced from different feedstocks on soil properties and sunflower growth. *J Plant Nutr Soil Sci* **177**:16–25 (2014).
38 Saran S, Lopez-Capel E, Krull E and Bol R, *Biochar, Climate Change and Soil: A Review to Guide Future Research.* CSIRO Land and Water Science Report series. CSIRO, Clayton, Australia (2009).
39 Xu RK, Zhao AZ, Yuan JH and Jiang J, pH buffering capacity of acid soils from tropical and subtropical regions of China as influenced by incorporation of crop straw biochars. *J Soils Sediments* **12**:494–502 (2012).
40 Laird DA, Fleming P, Davis DD, Horton R, Wang BQ and Karlen DL, Impact of biochar amendments on the quality of a typical Midwestern agricultural soil. *Geoderma* **158**:443–449 (2010).

